International Journal of Engineering Research & Technology (IJERT)
ISSN: 2278-0181
Vol. 10 Issue 03, March-2021

Development of Multipurpose Student ID card System

Dr. Ramesh Nayak B, Yashas R Sathvik , Navya Pai, Praveen Kumar B[b]
[a]Professor, Department of Industrial Engineering and Management, BMSCE Bangalore -19, India.
[b]Students, Department of Industrial Engineering and Management, BMSCE Bangalore -19, India.

***Abstract:-* RFID is a technology that is being widely used in most of the places like Metro stations, corporate offices, and passport offices and so on. It has incredible number of advantages- easy identification, wireless communication, low cost of investment and operation, fast communication, etc. This paper tries to use this technology in an educational institution. The idea is to automate and simplify the various processes that are done frequently. Also, to reduce the time and effort invested by teachers and students as well. Trying to overcome human errors that can be possible and provide a sense of discipline amongst the students. And presented a prototype that allows a student to use RFID card of student for multiple purposes such as attendance and library books issue. Also 50%-time reduction will be noticed from attendance system and 40% time reduction will be noticed from library system prototype that is developed.**

Keywords:- RFID, Product Design & Development, Arduino Uno, Tracking System

1. INTRODUCTION

In educational institutes, attendance is an essential system that maintains the record of the student and provides summaries of their presence. They play an important part in providing eligibility to a student to be able to write his/her semester end examinations. A large amount of time is taken in order to mark the presence of students by teachers. It is a long and repetitive process where the teachers call out student's names and they reply in affirmation about their presence. There is a scope for simplifying the process by automating it. It will help in making the staff free from mundane tasks and save precious time of classroom. It reduces the heavy workload that the teachers have, by digitizing the process. There are various technology concepts that could be used to come up with solution for this problem like Barcode, biometric systems, radio frequency systems.

Radio Frequency system is the latest technology which is rapidly being used in most of the places these days- Industry, Corporate offices, malls etc. These systems can be designed to be very compact and aesthetic. They are faster in working when compared to other systems (barcode and biometric). They also enhance the security of the data because it ensures zero data manipulation as it provides role-based access. RF Attendance tends to provide robust, automated and secure attendance management. With this system, student attendance management becomes easier, efficient and also accurate. The chance of proxy attendance and manipulations in the attendance status can be eliminated by this system. This automates the entire system of registration, attendance recording and data processing on attendance servers. The faculty is made free from the monotonous work of attendance taking in every lecture and can concentrate on full lecture. ' Radio Frequency system can also be applied in various other situations of an educational institute. The potential application apart from attendance is the library system. It helps the process of maintaining, organizing and recording details of each book and also the borrower of the books. This automates the library activities completely and can cause in instant issue/ reissue of the books. This makes the data handling simple and efficient. A lot of effort and time is saved. This report consists of 12 chapters explaining in detail about our project. Also the project ends with the scope of future work and how well it can be developed more**.**

The scope of our project covers two major processes that are carried out in an educational institute- Attendance and Library system. The monotonous process of attendance taking is eliminated and is automated at the same time. This reduces time and effort put in by the teachers to finalize student's attendance and give them updates. It also prevents students from giving proxy and manipulates their attendance. The same ID card could be used for another application-the library system. This provides easy data and the students waiting in queues to borrow books can be reduced because RFID systems are faster than the current system (barcode scanning). The data is obtained in the SD cards which could be read and processed easily using simple excel functions.

Advantages of Using RFID System:

- Speed and Accuracy- The system is fast and more accurate than manual attendance system, prevents incorrect data entry and reduces paper work.
- Enhances Punctuality- This system records the time of arrival of the students to class and displays their tardy behaviour which will teach students the importance of punctuality.
- Reduced Staff effort- Automation of attendance will reduce the mundane manual paper work that the faculty has to do every hour of class.
- Reduced time- Automation leads in the elimination of repetitive work and these results in reduced time to take attendance. Also, to scan books, in case of library system.
- Error Free- Mistakes are prone to happen usually by humans and it requires additional work of redoing, recounting and reworking. This system is automated and the risk of mistakes is almost nullified.
- Environment friendly- Automation of the process will eliminate the use of papers and everything is stored drives and clouds.

(This work is licensed under a Creative Commons Attribution 4.0 International License.)

International Journal of Engineering Research & Technology (IJERT)
ISSN: 2278-0181
Vol. 10 Issue 03, March-2021

2. LITERATURE REVIEW

The challenges in industry and research [1] approaches to bridge the gap between Product and Technology development. It talks about two approaches of having product centric and technology centric way of Management. This paper gives to "What Does it takes to come from product development to technology Management?" It talks about the challenges seen in handling of technologies within the context of product development and innovation.

The changes [2] in the field of Product development in the past decade are exponentially increasing. The various driving forces in product development are Technology, Marketing, Ecological, and new business concepts. Product development integrates hard and soft properties. Fundamental Product development characteristics are integration, iteration, and innovation. Structured Product Development needs initial specification of the functional requirements. Inter-dependency model is very important in simplifying the product and the V-model for specification and verification is commonly used.

The RFID is a well know application for traceability, logistics and access control. It is ubiquitous and provides with decisive practical benefits that drive new product [3] development in terms of concepts and application. Here the paper talks about the use of RFID to help the physically challenged people it is helping and monitoring people who are at risk or with the dis-ability. Among the different standards, RFID low frequency or high frequency have been chosen because they are well known and also deployed in many other situations and, on the other hand, they are more precise and secure because of their limited read range and their robustness to environment.

RFID is being used almost in every industry possible Health Care being one of the important to make use of RFID[4] Chip in treating patients lives by preventing medical misidentification and mis-treatment and keep track of patients but this raises security concerns so here this paper talks about the various security risk and build a frame work to protect the medical records by making use of smart cards more secure and using active tags and prevent the ability to clone tags. The various types of security threats are Sniffing, Spoofing, Relay and cloning. Eavesdropping/sniffing is an unauthorized access to tags

This paper talks about use of RFID in Supply chain since the amount of data in the contained in RFID using Supply [5] chain will be huge we will need to come up with the better and efficient method to get out of the RFID chip by coming up with the unique group ID written in tag memory . The Data obtained from the RFID will be having the start time end time Group ID written In a tag after the raw data is obtained they assigned we are assigning the unique prime numbers to each code and each prime number will have a unique group Id and name the group ID will be made depending on the Product Then that hash values will be bit wise XOR and the resultant will be the group-id which will be written on each tag of that group. We can verify the delivery of the products by taking the hash (Electronic Product Code) and bit wise XO Ring.

They talk about how human science is entering into the information age where having a profound influence in the reform of school management. In Modern school having modern equipment's and facility has a level of information management which is becoming the viable factor of school and also providing [6] the status quo of the school. Here we get to know about the use of campus card system to achieve all the people oriented digital management from the campus environment, resources and activities like the card being one access to all places in the campus of a school or university. This was a pilot project done in China which was used to achieve the effective integration, confirmation and optimization of various resources so as to achieve the effective integration and optimization of various resources to achieve the efficient allocation of resources and coordinate and optimizing the process of school management and logistic services, to realize the process of teaching, learning and to improve the management level, service, effectiveness and benefit.

The Era of Industry4.0 is based on the evolution of information and communication so it's a part of boon and bane for the scientific and industrial community [7] but it also creates specific challenge to see the new industrial learning platform where mostly in the lean factory management. A significant and interesting topic to see about the Industry 4.0 is the tracking of the Manufacturing Execution system (MES). RFID technology is used since it not only identifies but also sends information about a particular product at regular intervals. The live tracking seen in this paper is much viable for the small-lot and single item production units. In the Design aspect of this RFID is that there main idea was to demonstrate all main aspect of the smart production, emphasizing vertical integration of production system. Here the Industrial RFID System and Window tablets should be installed at every workstation here we need to connect MES to ERP thus helping in creating a pull-based production system. And in the methodology the RFID was put into test. So they took two types of RFID Tags one having EEPROM and other having the FRAM type so in every workstation the workers should bring the tag near the antenna so that the information can be read and the workers instruction would be given on the screen.

The use of RFID in a supermarket to purchase their daily products and pay for that using the ZigBee with Anti-theft technology so with the help of RFID and ZigBee they came up with a smart shopping card system which will keep the track of the purchased products and do the online transaction[8] for billing using RFID and ZigBee, this will also give the suggestion to the user based on the purchase history from a centralized system. So in this experiment there will be a RFID tag to every product and every cart will have a RFID reader and Zig bee attached to it also adding to this will be RFID reader at the exit so as to stop from theft. Here they made sure that every product will have a RFID Tag on it and each cart will have a RFID reader and ZigBee Trans-receiver Implemented on it. Store will be having a centralized server system, after the payment the card must be reset and if items are removed then it'll be deleted from the cart and there should a LCD screen attached to every cart which will display the product info, expiry date and Better alternatives.

(This work is licensed under a Creative Commons Attribution 4.0 International License.)

International Journal of Engineering Research & Technology (IJERT)
ISSN: 2278-0181
Vol. 10 Issue 03, March-2021

This paper we get to know the use of RFID in the electronics company of an automotive sector where it deals with improving the internals logistic visibility. Firstly their found their internal logistic problems based on observation,[9] interviews, document analysis and seeing the current internal logistic process so based on the finding they came up with the use of RFID in the internal logistic department to solve the above findings. RFID based solution is proposed as also the key challenges and the expected results and advantages. The company taken into consideration was the Bosch Car Multimedia Portugal to develop their ongoing smart internal supply chain. The company was aiming to improve the process by eliminating the waste to reduce cost and increase productivity and to implement lean but they were lacking traceability of raw materials in the internal storage unit. The problems identified were there was a lack of standardization in raw materials label and there is a lack of traceability form in one of the warehouses. Raw materials are allocated in the SAP system to warehouse at the picking process and lacks the visibility at repackaging also there is no automatization in different logistic operators such as put away or picking and ordering of raw materials, lastly lack of visibility in the material handling equipment.

The paper talks about using RFID technology in communication purpose like it leads to increase in the visibility management of products and also it talks about the cost and performance of effective design for a new and proposed model of RFID system [10] used to track passport through a development of objective model which will take account of economical and performance factors. The developed model will help in overcoming the allocating optimal numbers of related facilities and obtaining trade off worth the three objectives like the operation sot and minimizing the implementation cost so here they have used the idea of multi objective model in terms of the Fuzzy multi objectives and to solve that they have used two solution method and decision making method was employed to select the best one among the two solution. Here, the model was developed using a fuzzy multi- objective model having three stages know as office 1, 2 and 3. Office 1 receives the request for new or to renew passport from clients ,also makes sure to check the required documents are correct before sending further to office 2 where it is responsible for issuing the new passport and checking if the information provided is true and last it goes to office 3 where it'll be delivered to clients. The RFID which was proposed is for implementation to improve the system performance for information accuracy, tracking and issuing and renewing processes for clients. This system having no extra cost and due to development of FMOM (fuzzy multi0objective model) the aim of using FMOM is to Minimize the cost required for implementing and opening proposed RFID enabled tracking system: To minimize the interface that would occur during reading and also to maximize the social impact.

3. THE OBJECTIVES

Here In this paper we will talk about two scenarios in the education system the attendance scenario and the Out time in the library.

- This product will help in eliminating the non-value added time during a lecture hour and thereby increasing efficiency of a teacher
- Will help in reducing the time taken by the student during his check out while borrowing books.
- Trying to introduce automation in the Educational Sector

4. ASSUMPTIONS CONSIDERED

The assumptions considered in the following prototype are:

- Only one person can enter at a time. Multiple entries are not allowed. Even if multiple entries are forced then the sensors won't detect anything and the result is nil
- Every person should possess an ID card always. Valid data is recorded only if ID card is used for the system.
- The system should always be powered. In case of power failure, backup power can be given with the help of power bank. Since it is prototype, power should be always supplied.

5. METHODOLOGY

The main of this project to provide a system that automatically records student data in attendance and in library systems which makes it easy to handle, errorless and systematic. Also, there is a provision of avoiding proxy that is usually encountered in educational institutions. To properly define the scope of the project, it was necessary for us to know and learn about product design and development and its stages.

1. Opportunity Identification: In the context of product development, an opportunity is an idea for a new product. The performance of the opportunity identification process depends on considering a large number of opportunities from a variety of sources, applying idea generation processes that result in good opportunities of widely varying quality. By systematically filtering and developing a large set of raw opportunities to identify an exceptional few for further development, the resources of the organization are put to their best use.

2. Product Planning: The product planning process takes place before a product development project is formally approved, before substantial resources are applied and before the larger development team is formed. Product planning results in the portfolio of projects that an organization might pursue.

3. Identifying Customer Needs: This is an integral part of the concept of product development process. The identified customer needs are used to guide the team in establishing product specifications, generating product concepts and selecting a product concept for further development.

4. Product Specifications: Customer needs are generally expressed in the "language of customer". In order to provide

(This work is licensed under a Creative Commons Attribution 4.0 International License.)

International Journal of Engineering Research & Technology (IJERT)
ISSN: 2278-0181
Vol. 10 Issue 03, March-2021

specific guidelines about the design and engineering of a product, development teams establish a set of specifications, which spell out in precise form, measurable detail what the product has to do to be commercially successful. The specifications have to reflect the customer needs, should make the product stand out from the competitive products, and should be technically and economically feasible. Specifications are typically established at least twice. After identifying the customer needs, the team establishes target specifications. After concept selection and testing, the team sets final specifications.

5. Concept Generation and Selection**:** A product concept is an approximate description of the technology, working principles and form of the product. It is a brief and crisp description of how the product intends to satisfy the customer needs. A concept is usually expressed as a sketch or as a three dimensional model and is often accompanied by a concise textual description. Concept generation is relatively inexpensive and can be done relatively quickly in comparison to the rest of the phases of the process. Concept Selection is the activity of evaluating the generated concepts in terms of customer needs, feasibility and other criteria, comparing the relative strengths and weaknesses of the concepts and selection of one or more for further investigation, testing or development. It involves concept screening and scoring. Concept screening uses a coarse comparison system to narrow the range of alternatives. Concept scoring makes use of weighted selection criteria and a better rating scale. The main agenda of concept selection is to select a winning concept, help build team consensus and create record of the decision making process.

6. Concept testing**:** Concept testing helps in verification of the customer needs being adequately met by the product concept, assess the sales potential of a product concept, and/or gather customer information for refining the product concept.

7. Prototyping**:** A prototype is an approximation of the product on one or more parameters of interest. Prototypes are used for learning, communication, and setting a design for the actual product.

8. Managing projects**:** successful product development requires effective project management.

6. CONSTRUCTION AND WORKING

The diagram tells us about the construction of attendance system for in-time using RFID technology. There is an Arduino Uno as the microcontroller having 14 digital I/O pins which is shown in the diagram. Then it's connected to two IR sensors to Pin 2&3 of the microcontroller which will help in detecting object. Micro SD Card Module to Pin 4 helps in storage of data which can be retrieved at the back end; buzzer to Pin 5 helps in giving intimation when students are late to class; Pin 6 & 7 have been connected with the LED lights. And lastly from the Digital I/O ports there are Pins form 9-13 making way to the RFID reader (RFID-RC522) this is used to sense the tag from students ID - card during checking in and even during check out where it 'll transfer the details to Micro SD card Module for data processing and storage. Now coming to the analogue part of the Arduino UNO microcontroller. It is seen that it has 6 Pins (A0-A5). Pins from A0 & A1 have been connected to the Real time clock module where Address and data are transferred serially through a SPI bus. The clock provides seconds, minutes, and hours. The clock operates either in the 24hr format or the 12hr format with the AM/PM indicator. Lastly, coming to the output voltage of Arduino where it has two output Voltages one is the 3.3V output connected to the Micro SD card Module and the RTC and the other one is the 5V output connected to buzzer. Also two resistors are added to the circuit of 220 and 330 ohmic value which will help in stabilizing the current during any fluctuation. The power source for Arduino can be of two ways one being

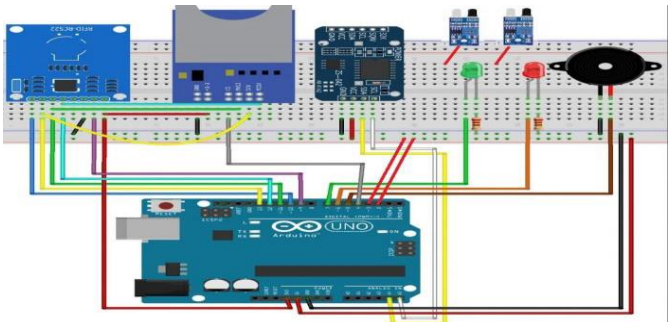

Figure 1: Attendance system

from the USB cable using an electronic device or the other being a 5V adapter capable of producing 500mA used to run the microcontroller and the electronic equipment's connected to it.

The diagram below tells about the construction of library system using RFID technology. There is an Arduino Uno as microcontroller having 14 digital I/O pins which is shown in the diagram. Its connected to Micro SD Card Module to Pin 4 which helps in storage of data and can be retrieved at the back end; buzzer to Pin 5 helps in giving intimation when students don't adhere to the rules set by library; Pin 6 & 7 have made a connection with the LED lights (Red and Green where Green indicates student adhering to rules set by library and vice-versa for the Red indicator). And lastly from the Digital I/O ports there are Pins form 9-13 making way to the RFID reader (RFID-RC522) this is used to sense the tag from the books and the student ID while checking out from the library where it 'll transfer the details to Micro SD card Module for data processing and storage. Now coming to the analogue part of the Arduino UNO microcontroller we will see that it has 6 Pins (A0-A5). Pins from A0 & A1 have been connected to the Real time clock module where Address and data are transferred serially through a SPI bus. The clock provides seconds, minutes, and hours. The clock operates either in the 24hr format or the 12hr format with the AM/PM indicator. Lastly, coming to the output voltage of Arduino where it has two output Voltages one is the 3.3V output connected to the Micro SD card Module and the RTC and the other one is the 5V output connected to buzzer. Also two resistors are added to the circuit of 220 and 330 ohmic value which will help in stabilizing the current during any fluctuation. The power source for Arduino can be of two ways one being from the USB cable using an electronic device or the other being a 5V adapter capable of producing 500mA used to run the microcontroller and the electronic equipment's connected

(This work is licensed under a Creative Commons Attribution 4.0 International License.)

International Journal of Engineering Research & Technology (IJERT)
ISSN: 2278-0181
Vol. 10 Issue 03, March-2021

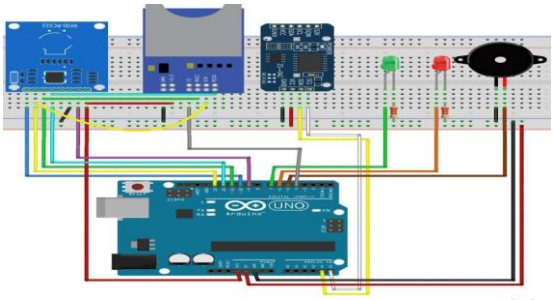

Figure 2: Library System

The below flow chart gives us a vivid picture of the One Man One tick system in the role of attendance for students in the education system. To overcome many shortcomings such as proxy issue and so on. This model will enhance it by removing the shortcoming by simply adding two IR sensors. In this flow chart it can be seen that when a student enters the classroom there will be IR sensors; one near the door and other at a distance away from it. When a student enters he has to pass through the IR sensors which are mainly used for Body detection. So when a student passes through the first IR sensor, his Tag gets activated and now he should pass through the next sensor else the RFID reader would not sense the tag and the attendance won't be recorded. So after he passes both IR sensors his attendance will be recorded and his Card number will be processed and stored in the Micro SD card Module used for the back end system to verify for the attendance status. And an upgrade to the above system can be the out read. RFID reader where it will show the out time of a student leaving the classroom which will help us in knowing the time a student spent in a particular class room which would be very helpful when continuous classes happen in the same particular room for long hours this will eradicate the problem of every hour student logging in to get his attendance marked and eliminate repetition of attendance for every class.

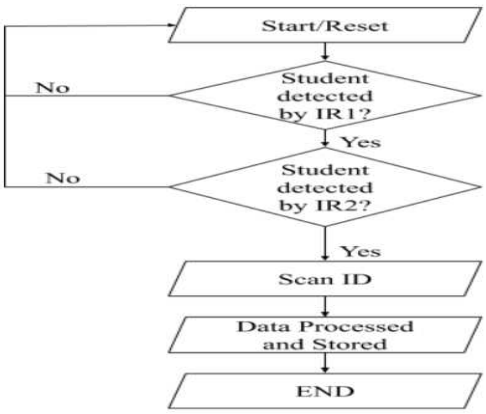

Figure 3: Flow chart of attendance system

The following flow chart explains about the working of RFID system in Library where in the present way: a student enters the library takes a book and goes to the check-out counter, he has fill up an application and the librarian cross verifies if he has any due or late submissions and whether he is taking permissible number of books and so on this process is very time consuming and has too many delays. So in the model proposed we take into the use
of RFID system to help in checking out from a library. The flow chart gives the explanation of the system where student enters the library his RFID Tag is scanned and marks his incoming to the library so after collecting his books he proceeds to check out where each book having RFID tag which will be sensed at check out as in our system we have kept permissible limit as two books per person and if number of books at check-out is more than the permissible limits we hear a buzz sound and a red light is seen from one of the LED's if not the data will be processed and stored in SD card for future references.

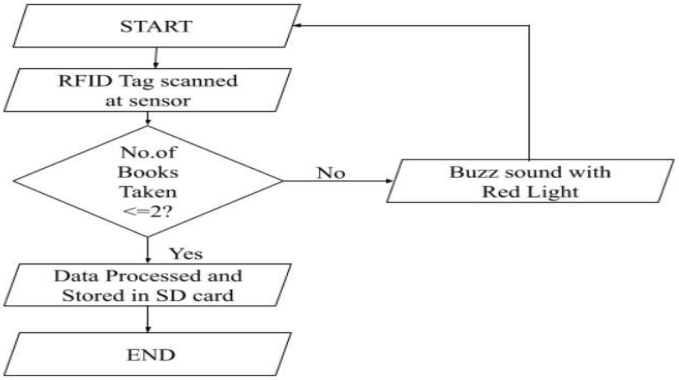

Figure 1: Flow chart of Library card system

7. RESULTS

The output of the project was made to appear on an excel sheet since its universally free and easy to use application. In the e following two experiments conducted in our project the results were obtained as follows:

- In the Attendance System when compared to the conventional way of marking attendance which took on an average of 10-15 mins of marking attendance for a class of 60 pupils , our system will take 5 mins to take attendance of 60 pupils thereby decreasing the attendance time by 50%.

- In the library card system when compared to the conventional way of taking books was found out to be 1.5 mins per person but our system can reduce it to 0.5 min thereby decreasing the waiting time In queue by 60%.

8. CONCLUSION

In this study, a problem of RFID enabled student tracking system was conducted in an educational sector. The prototype on development of multipurpose student ID card started off with a idea as to what has to be done. In order to have a clear idea and more knowledge on this topic, several journals was read and reviewed. By these journals, got to know about the various ways to carry out the project and also learnt about new technology. Once the literature review was done, the next part of product design and development was concept generation.

(This work is licensed under a Creative Commons Attribution 4.0 International License.)

International Journal of Engineering Research & Technology (IJERT)
ISSN: 2278-0181
Vol. 10 Issue 03, March-2021

Here we thought of all the possible ways to carry out the project economically. The economical methodology concepts were taken from the above mentioned. Then this concepts and ideas had to be checked for economic viability, After passing all the basic feasibility condition we built a porotype which would help us in automating attendance system and the library system where a few application of the vast sector has been looked into. Going further deep into the technology we can use the ERP software which would help us in details of the students like the scores in each subject of the current semester and previous semester marks. Therefore, consolidated data of each student is available at one place. Considering various semester students' data of attendance and marks, a forecasting model for their performances can be drawn out. This will help the faculty in designing the curriculum and also the teaching patterns if needed. This can result in improving their performance academically. A mobile application could also be developed so that students can also get their data (scores, attendance status) whenever required without having to wait or ask anyone about it. The platform could also be used as a notification board where important information is displayed, be like Exam time table, result sheets, holiday notices and so on.

9. REFERENCES

[1] Michael Bitzer, Michael Vielhaber, FabioDohr ,Germany. "From Product Development to Technology Development" 24th CIRP Design Conference, Procedia CIRP 21 (2014) 247 – 251.

[2] Jan-Gunnar Persson, Sweden "Current Trends in Product Development", 26th CIRP Design Conference, Procedia CIRP 50 (2016) 378-383.

[3] YvanDuroca, SmailTedjinib, France "RFID : A key technology for Humanity", Radio Science for Humanity , C.R. Physique 19 (2018) 64-71.

[4] Avery Williamson Sr., Li-Shiang Tsay, Ibraheem A. Kateeb, Larry Burton USA, "Solutions for RFID Smart Tagged Card Security Vulnerabilities", 2013 AASRI Conference on Intelligent Systems and Control, AASRI Procedia 4 (2013) 282 – 287.

[5] Sonia A Josepha, Joby N Jb, India "Analysing RFID Tags in a Distributed Environment", International Conference on Emerging Trends in Engineering, Science and Technology (ICETEST- 2015) , Procedia Technology 24 (2016) 1483 – 1490.

[6] Zhang Weijun,Cai Chang Qing, China "To achieve a Campus Interchangeable Card Based on RFID Technology", 2012 International Conference on Future Electrical Power and Energy Systems, Energy Procedia 17 (2012) 293 – 298.

[7] Jiawen Xiea,Minli Wanga, Jie Tana, China " A novel Method to evaluate the RFID system Reliability", 13th Global Congress on Manufacturing and Management, GCMM 2016, Procedia Engineering 174 (2017) 465 – 469.

[8] Nikola Gjeldum, Marko Mladineo, Ivica Veza, Croatia "Performance analysis of the RFID system for optimal design of the intelligent assembly line in the learning factory" , 8th Conference on Learning Factories 2018 – Advanced Engineering Education and training for Manufacturing Innovation, Procedia Manufacturing 23 (2018) 63-68.

[9] Ankush Yewatkara, Faiz Inamdarb, Raj Singhc, Ayushyad, Amol Bandale, India "Smart Cart with Automatic Billing, Product Information, Product Recommendation Using RFID & ZigBee with Anti-Theft" , 7th International Conference on Communication, Computing and Virtualization 2016, Procedia Computer Science 79 (2016) 793 – 800.

[10] F. Costa, M. do Sameiro Carvalho, J.M. Fernandez, A.C. Alves, Portugal "Improving visibility using RFID – the case of a company in the automotive sector", Manufacturing Engineering Society International Conference 2017 , MESIC 2017, 28-30 June Vigo, Spain, Procedia Manufacturing 13 (2017) 1261- 1268.

[11] Nikolai Byshov,Arkadii Simidiankin, Ivan Usepnsky, Russia "Methods of Traffic Safety Enhancement with the Use of RFID Technologies and its Implementation", 12th International Conference "Organization and Traffic Safety Management in large cities", SPbOTSIC-2016, 28-30 September 2016, St. Petersburg, Russia, Transportation Research Procedia 20 (2017) 107 – 111..

[12] Weiping Zhu, Mingzhe Li, China " RFID Reader Planning for Surveillance of Predictable mobile objects", 2017 International Conference on Identification, Information and Knowledge in the Internet of Things , Procedia Computer science 129 (2018) 475-481.

[13] Weiping Zhu, Shegchao Sun, China "Supporting Interval Time Complex Events in RFID System" ,2018 International Conference on Identification, Information and Knowledge in the Internet of Things, IIKI 2018, Procedia Computer science 147 (2019) 324-330.

[14] Abdulsalam Dukyil, Ahmed Mohammed, Mohamed Darwish , UK ". Design and Optimization of an RFID-enabled Passport Tracking System", Journal of Computational Design and Engineering, Journal of Computational Design and Engineering 5 (2018) 94–103.

[15] Abdul Malik Shaari and Nur Safwati Mohd Nor, Malaysia "Position and Orientation Detection of Stored Object Using RFID Tags", Advances in Material & Processing Technologies Conference, Procedia Engineering 184 (2017) 708 – 715.

(This work is licensed under a Creative Commons Attribution 4.0 International License.)